CAD FILE:

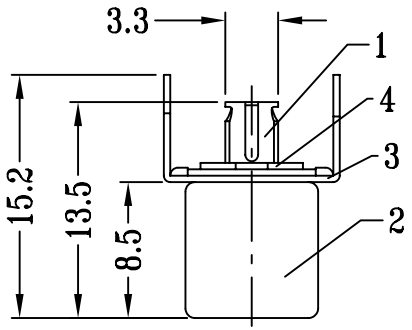

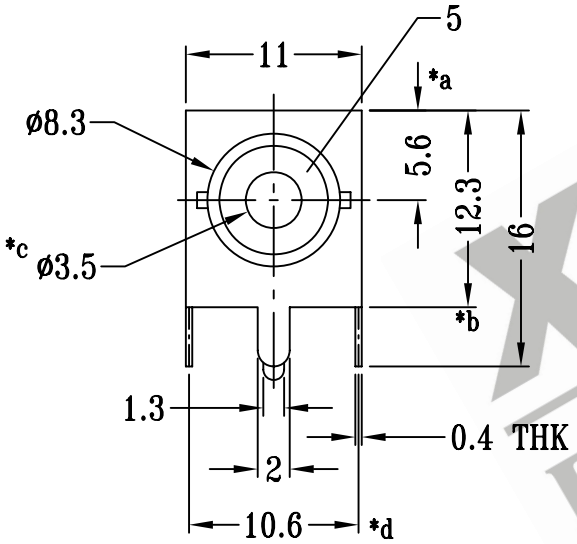

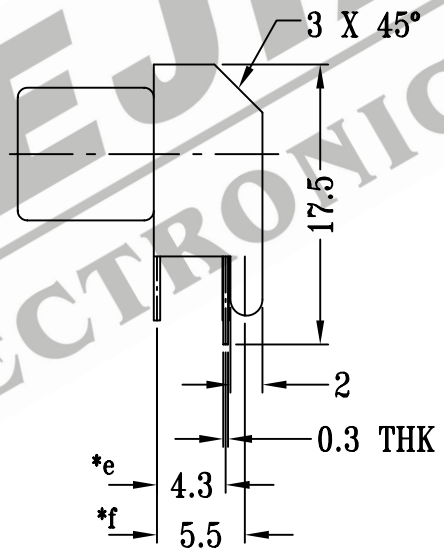

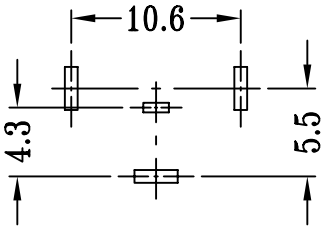

P.C.B LAYOUT

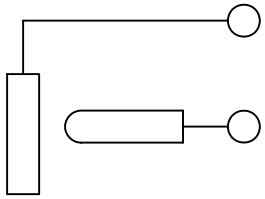

SCHEMATIC

注:带"*"表示关键尺寸(6个)

WASHER	
MODEL NO.	COLOR
RC-103-B	BLACK
RC-103-R	RED
RC-103-Y	YELLOW
RC-103-W	WHITE

NO.	PART NAME	MATERIAL	Q'TY	FINISHING
8				
7				
6				
5	WASHER	PC	1	BLACK\RED\YELLOW\WHITE
4	CASE	PC	1	BLACK
3	FRAME	STEEL STRIP	1	Ni PLATED
2	SLEEVE	STEEL STRIP	1	Ni PLATED
1	TERMINAL	BRASS STRIP	1	Ag PLATED OVER Ni PLATED

TOLERANCE UNLESS SPECIFIED
WITHIN: 1.5±0.1mm
OVER : 1.5±0.2mm

SHENZHEN XIEJIA ELECTRONICS CO.,LTD.

ISSUE	DATE	DESCRIPTIONS	APPD.

TITLE : RCA JACK

UNIT : MM

DRWG NO.: XJ-DR-RC103-00

MODEL: RC-103

SCALE: 2:1

DWN.	ZHOUYU	2003-9-10
CHK'D	FANGYING	2003-9-10
APPD.	KANGXINAN	2003-9-10

ALL MATERIALS MUST BE COMPLIANT TO ROHS

XIEJIA ELECTRONICS